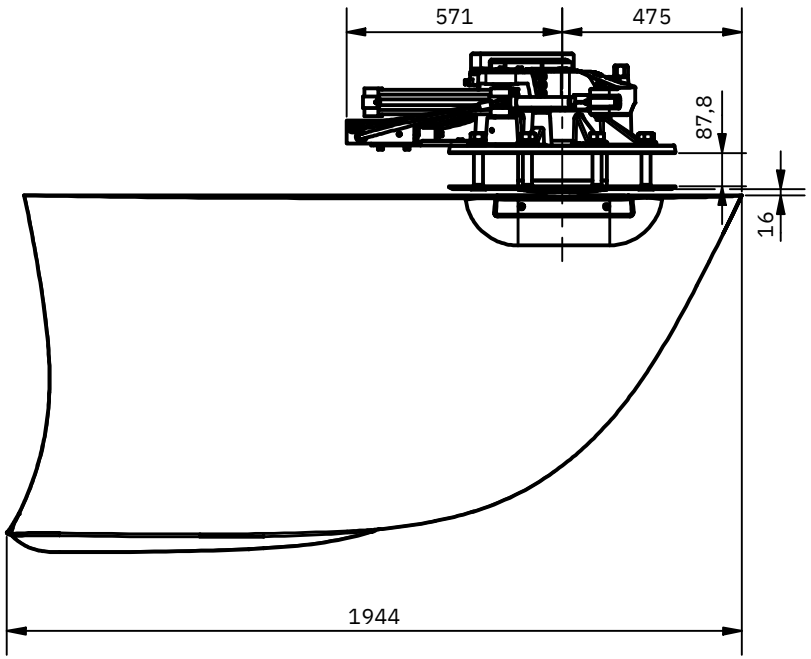

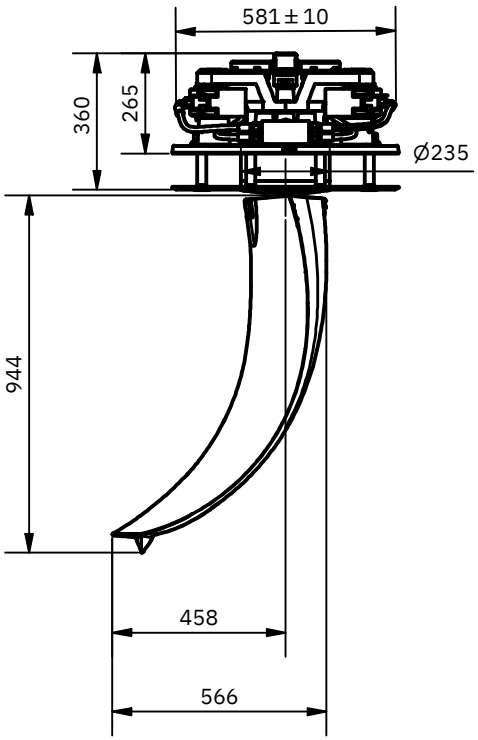

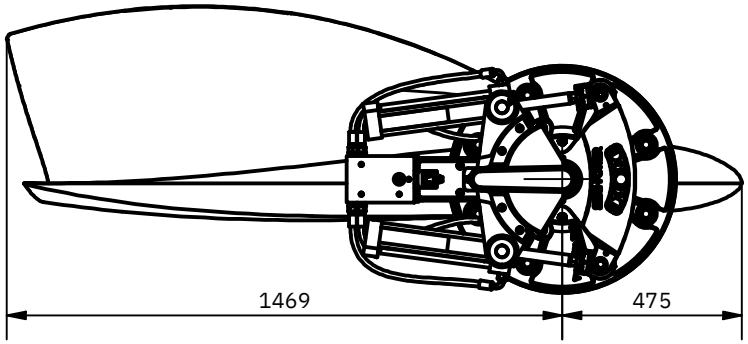

SLEIPNER

CONFIDENTIAL DRAWING NOT FOR PUBLIC USE
©All rights reserved Contents of this document is the intellectual property of Sleipner Motor AS.
It may not be copied or reproduced without written authorization by Sleipner Motor AS

All dimensions are in mm, if not otherwise stated.

Title **SPS92B-VFS1450 PB** Description					Tolerance
					Sheet size A4 / Scale 1 : 20
Stock no. SM184011	Creation date 21.12.2023	Rev. A	Weight 423,95 kg	Sheet 1/1	Drawing by elvira
Drawing no. SM184011-1	Material				