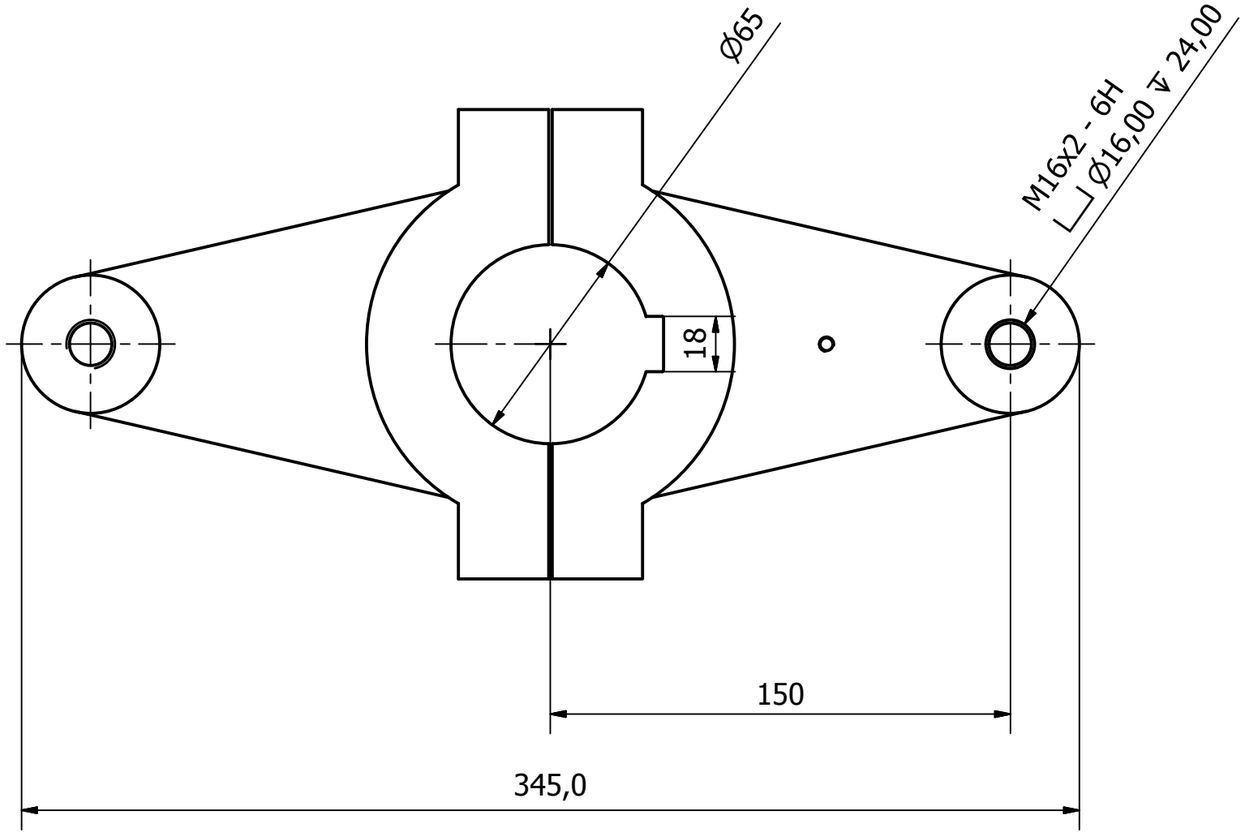


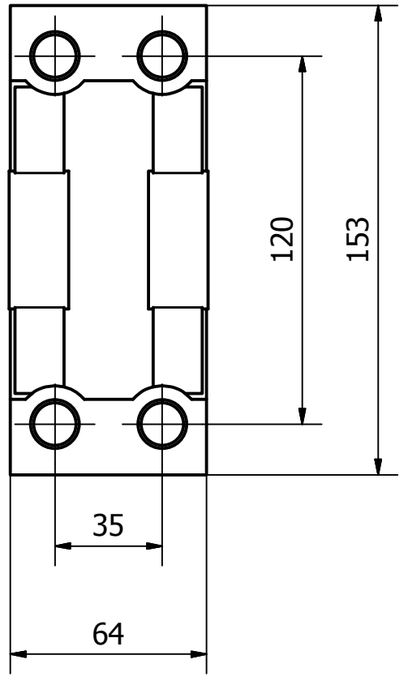


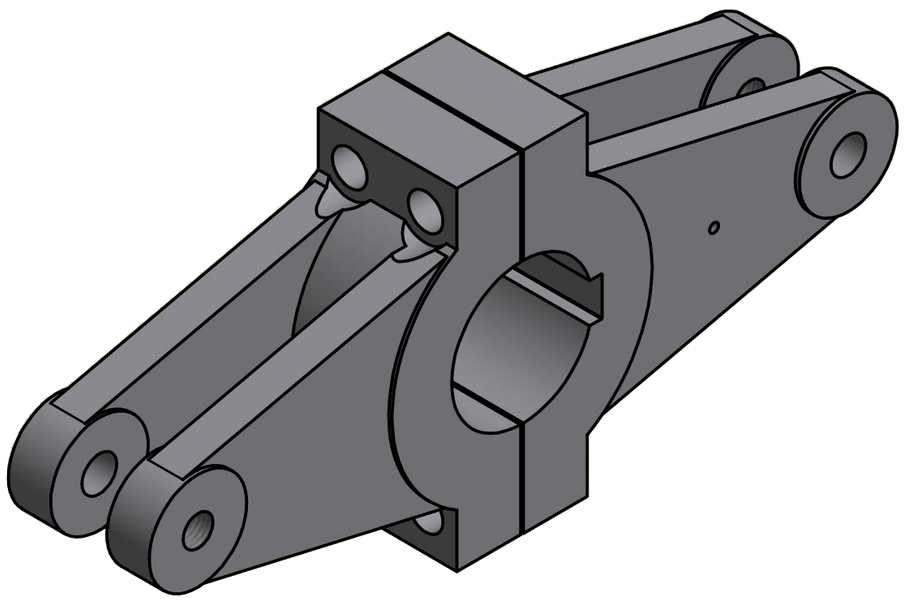

| Designed by | Material Type | Date | Drawing nr | Tolerance NS-ISO 2768-1 |
|---|---|---|---|---|
| Elvira H. | Malleable Iron | 03.05.2016 | SM-114279 | |

Copyright All rights reserved

SLEIPNER MOTOR AS

Title: Rorarm dobbel
Aksel 65 mm

| Part nr | Weight | Size | Scale | Edition | Sheet |
|---|---|---|---|---|---|
| 72859 | 7.729 kg | A3 | | 1 | 1 / 1 |