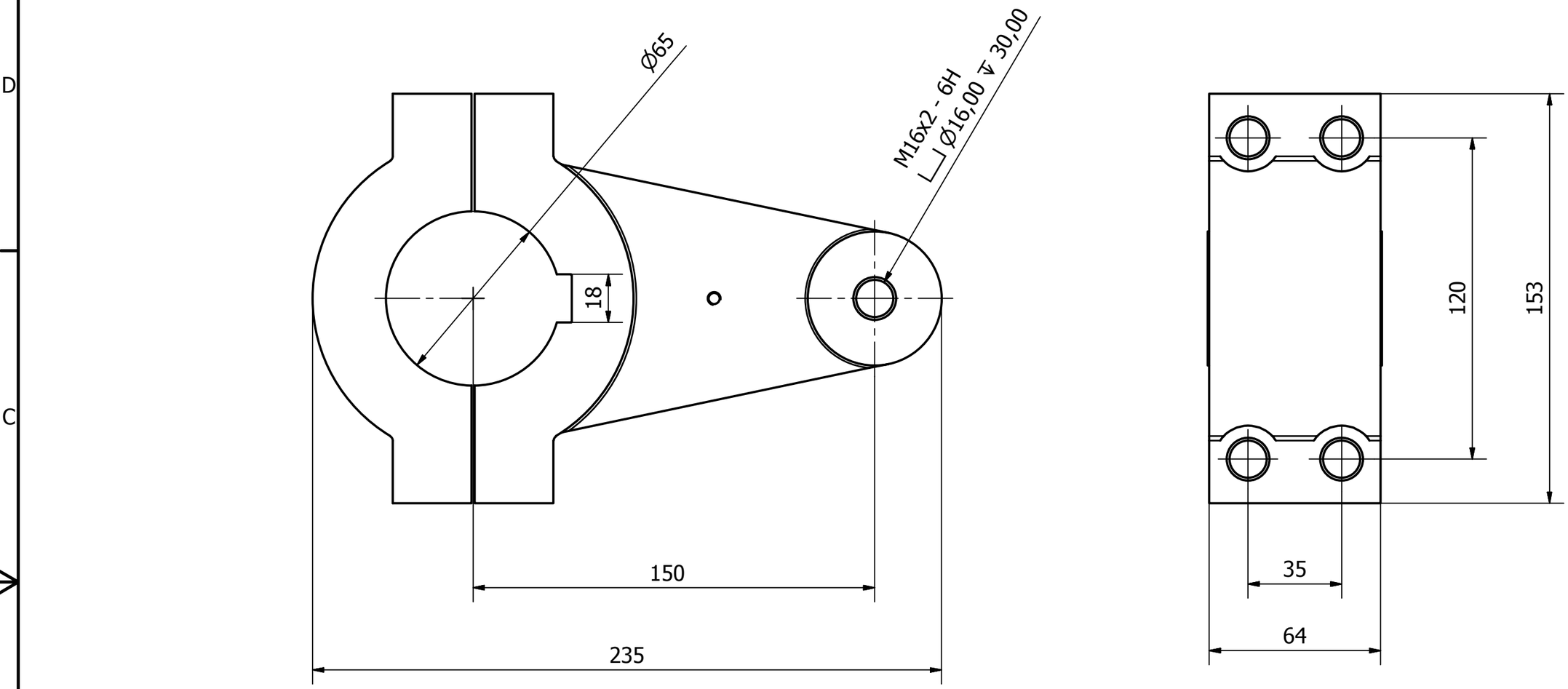

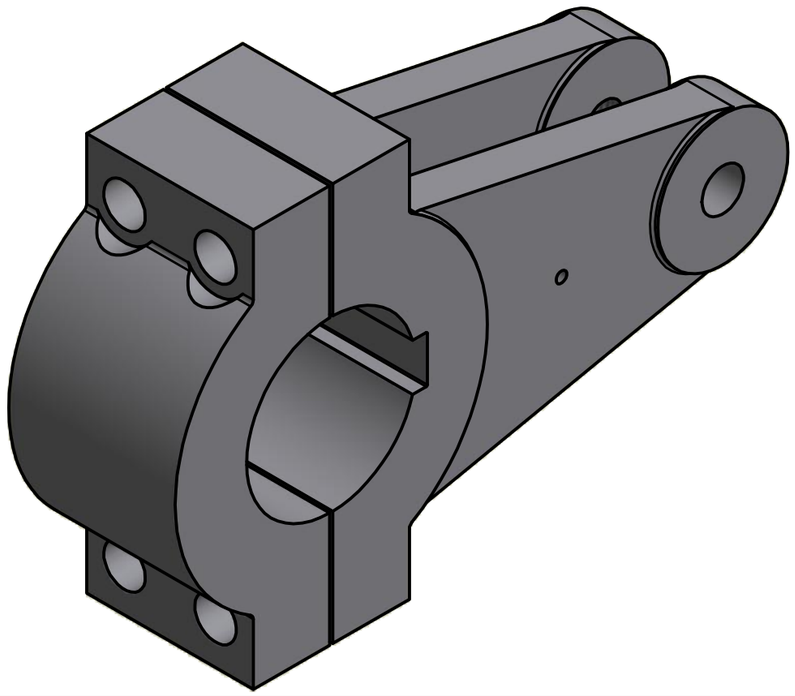

Designed by	Material Type	Date	Drawing nr	Tolerance NS-ISO 2768-1
Elvira H.	Malleable Iron	03.05.2016	SM-114278	

Copyright All rights reserved

SLEIPNERMOTORAS

Title: Rorarm enkel
Aksel 65mm

Part nr	Weight	Size	Scale	Edition	Sheet
72858	6.136 kg	A3		1	1 / 1