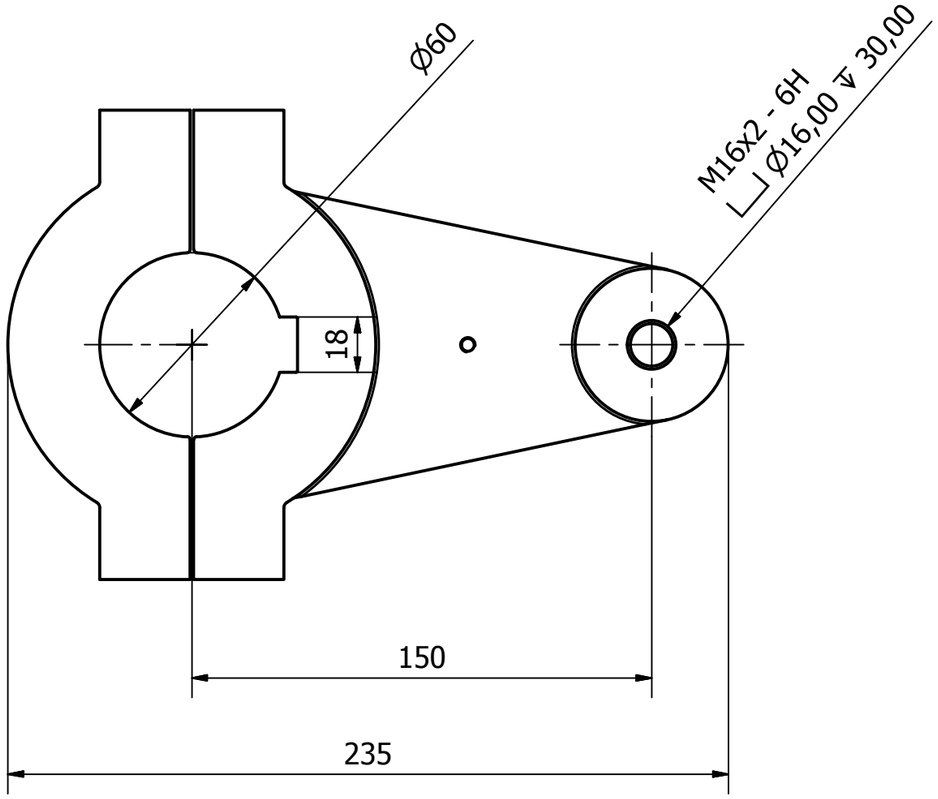

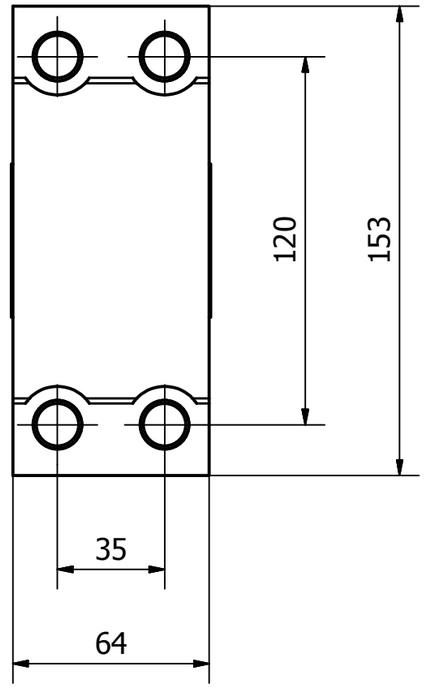

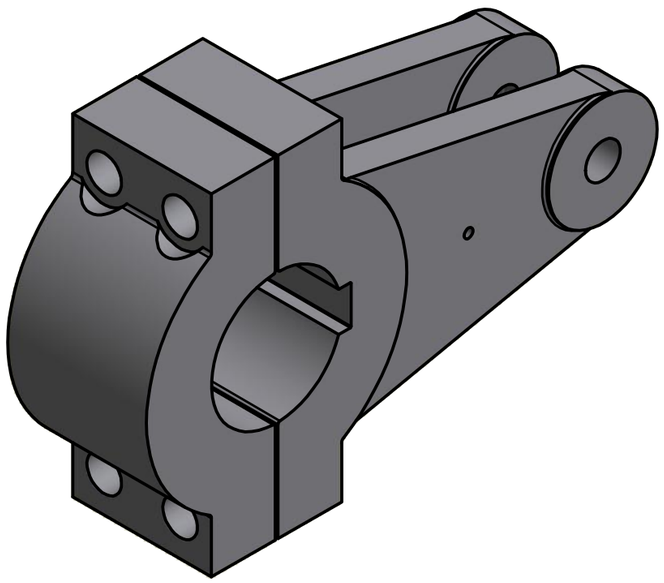

Designed by: Elvira H.	Material Type: Malleable Iron	Date: 03.05.2016	Drawing nr: 04-00-060-108	Tolerance: NS-ISO 2768-1	
Copyright All rights reserved SLEIPNER MOTOR AS	Title: Rorarm enkel Aksel 60mm				
Part nr: 72856	Weight: 6.355 kg	Size: A3	Scale:	Edition: 1	Sheet: 1 / 1