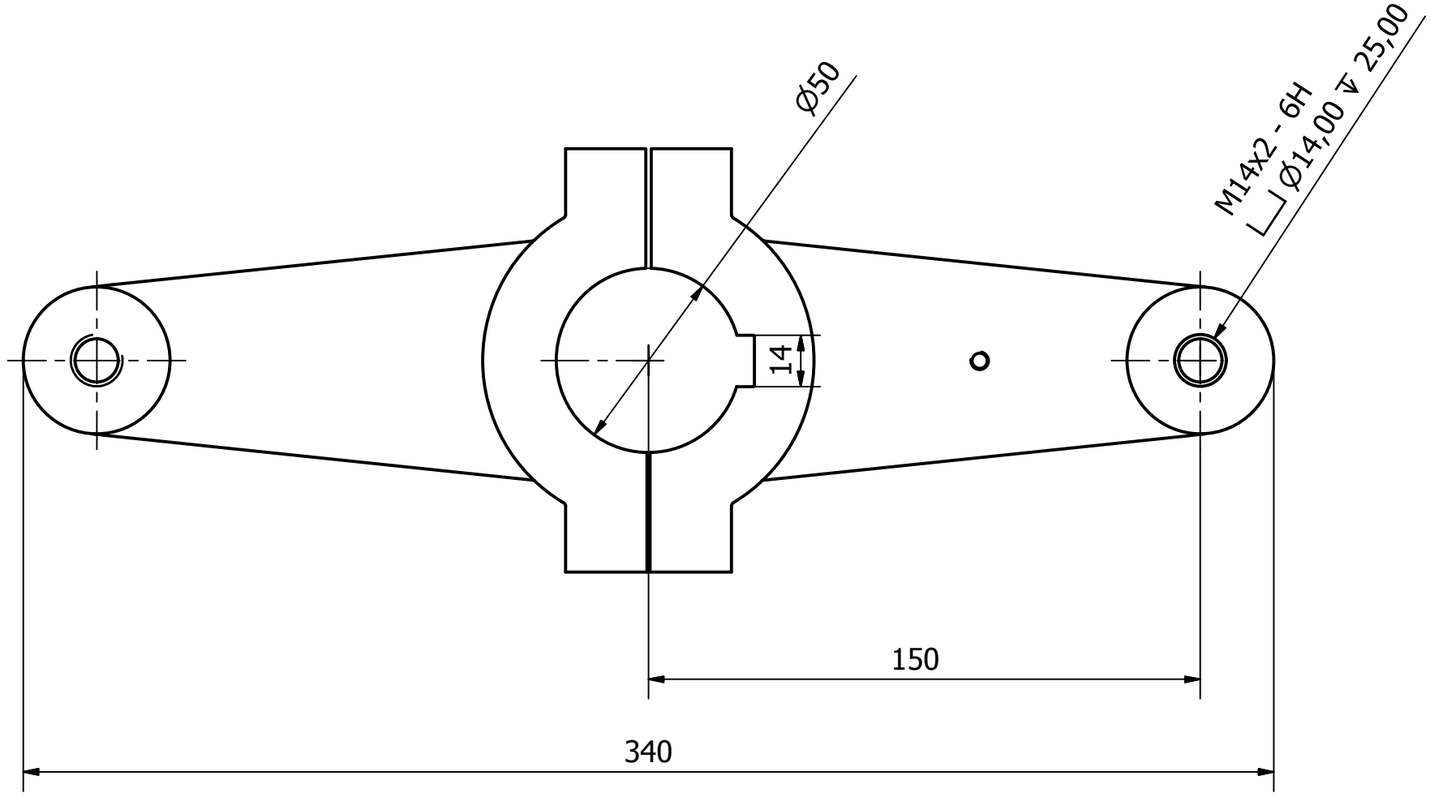

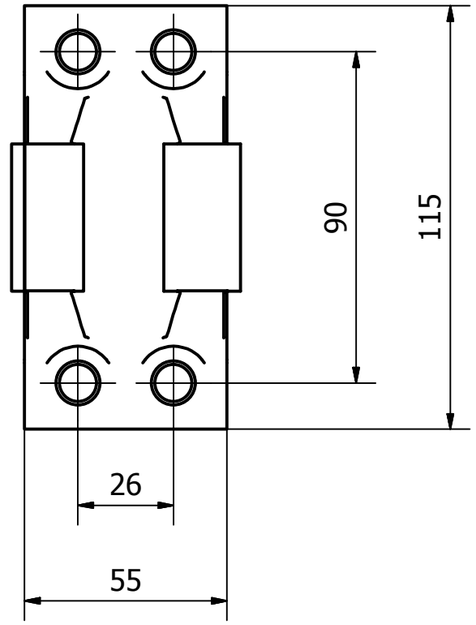

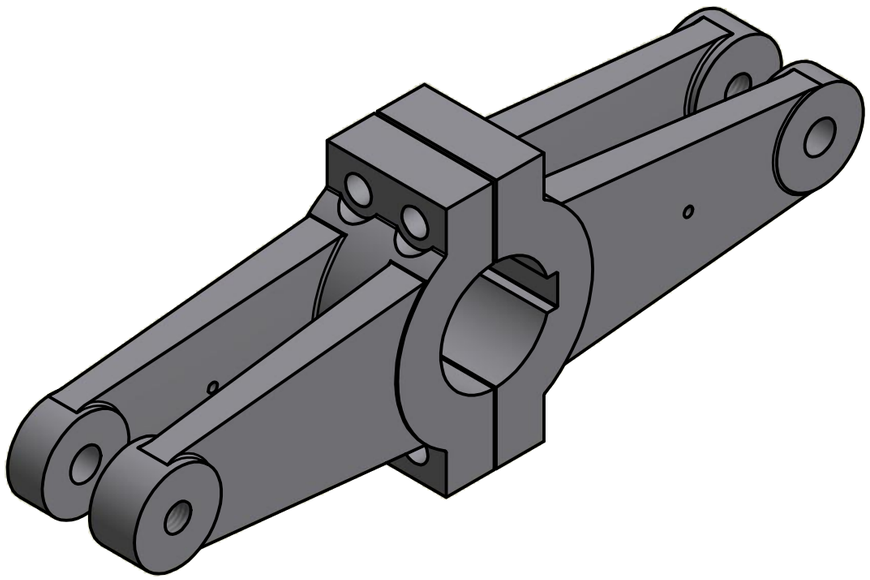

Designed by	Material Type	Date	Drawing nr	Tolerance NS-ISO 2768-1
Elvira H.	Malleable Iron	03.05.2016	SM-114295	

Copyright All rights reserved

SLEIPNER MOTOR AS

Title: Dobbel rorarm

Aksel 50 mm

Part nr	Weight	Size	Scale	Edition	Sheet
72853	4.637 kg	A3		1	1 / 1