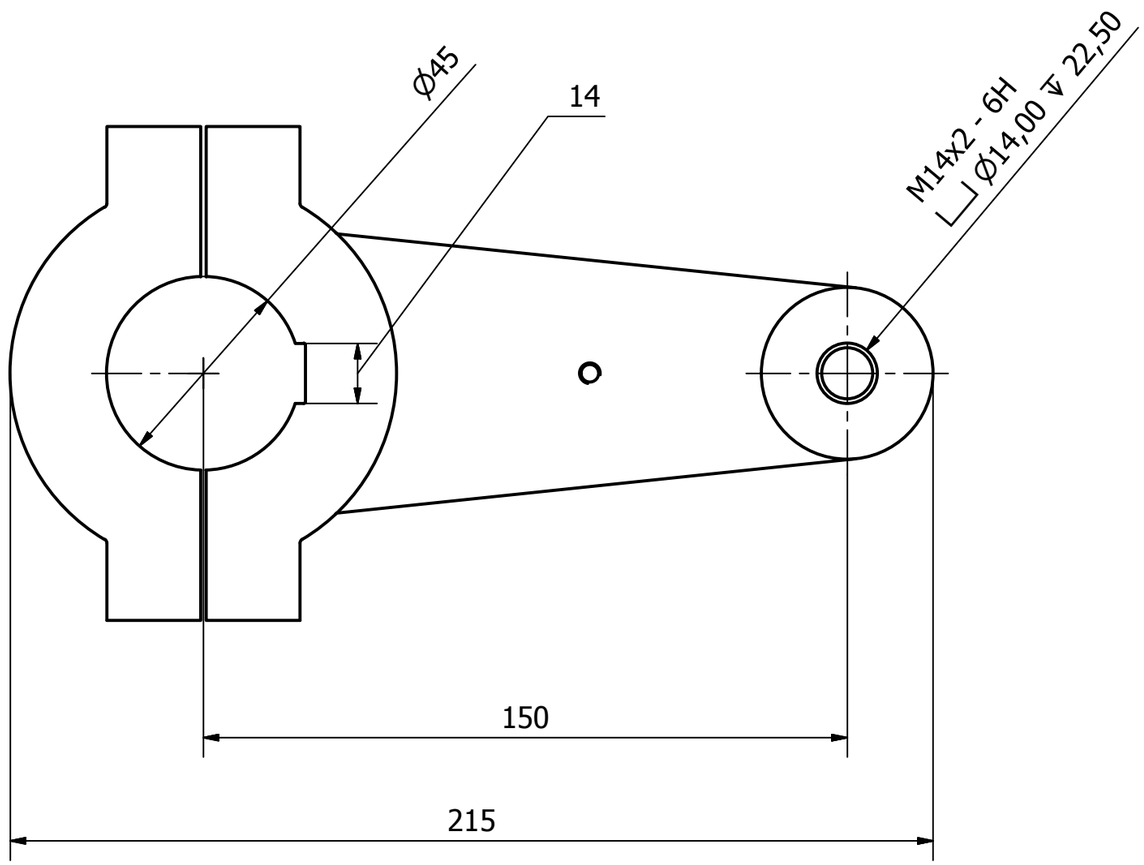

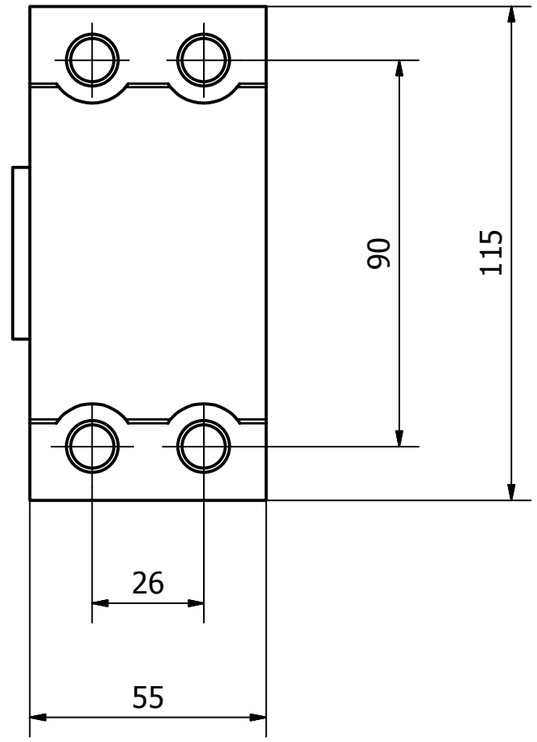

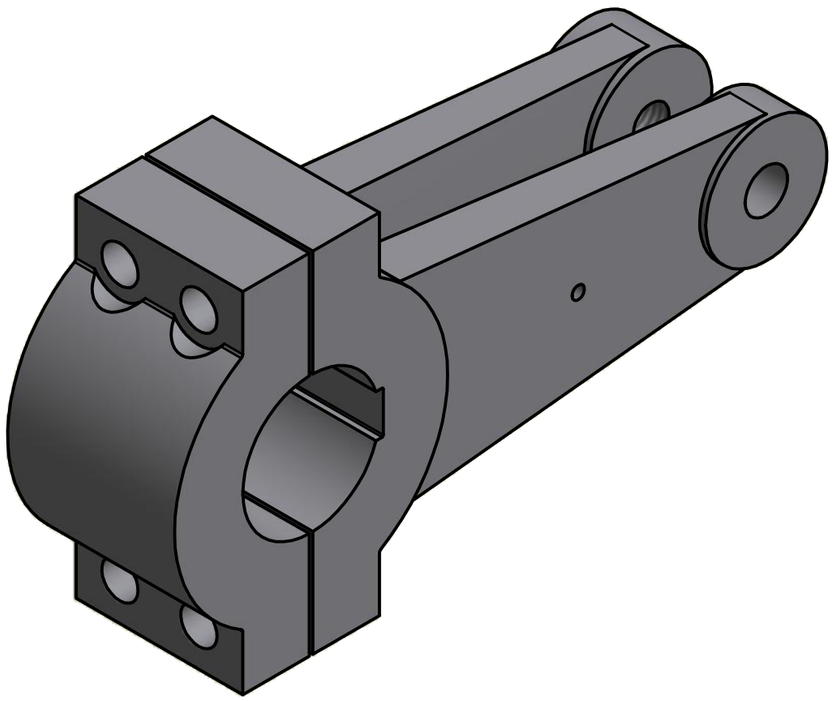

Designed by	Material Type	Date	Drawing nr	Tolerance NS-ISO 2768-1
Elvira H.	Malleable Iron	02.05.2016	SM-114292	

Copyright All rights reserved

SLEIPNER MOTOR AS

Title: Rorarm enkel
Aksel 45 mm

Part nr	Weight	Size	Scale	Edition	Sheet
72850	3.530 kg	A3		1	1 / 1